BUILDING PRODUCT

Stud-Lok

FAST METHOD OF FIXING WALL PLATES TO STUDS

Designed to provide a fast and easy way to connect wall plates to studs, Stud-Lok comes in two sizes to accommodate single or double wall plates.

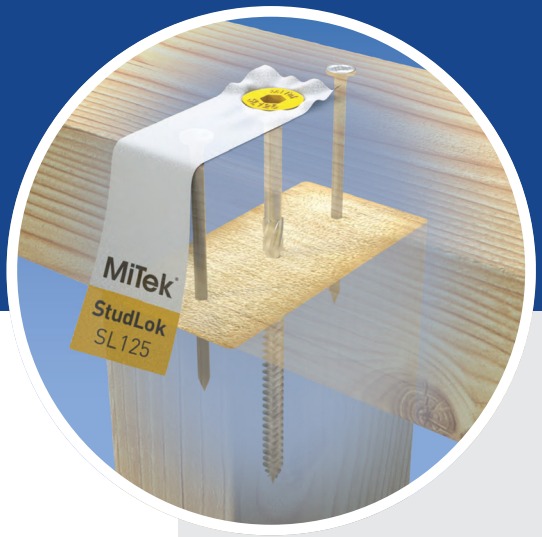

Stud-Lok is not to be used for Truss Tie Down unless in accordance with Certified details provided by MiTek.

For durability information, please refer to **Corrosion Resistance of MiTek Metal Connectors,** available on the MiTek website at **mitek.com.au** and in the **EasyCAT App** under the Technical Documents section.

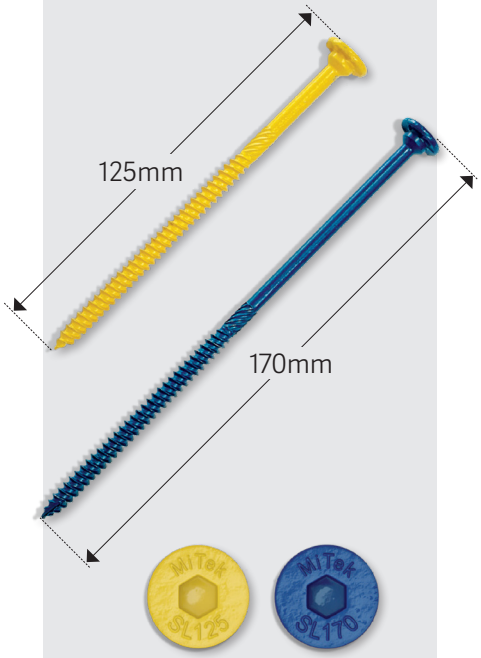

This Certified Engineering Building Product complies with the National Construction Code and Australian Standards.

ADVANTAGES

- Hexagonal drive bit included in every box
- Screw length and product identification stamped onto coloured head for easy inspection
- Ultra smooth driving ability
- Flat head sits flush with wall plate surface
- Does not interfere with truss tie down fixing on side of wall frames
- Ruspert coating for corrosion resistance
- Fully engineered and tested to Australian Standards

SPECIFICATIONS

Product Code	SL125
	SL170

MITEK.COM.AU

CODEMARK
CM70055
Australia

SL125 and SL170 Stud-Lok Screws are designed to suit single and double wall plates respectively. Their withdrawal capacities as shown in Table 01 may be enhanced by including the nail capacities from Table 9.19 of AS 1684.2 and AS 1684.3. The SL170 has a higher performance in thicker wall plate applications.

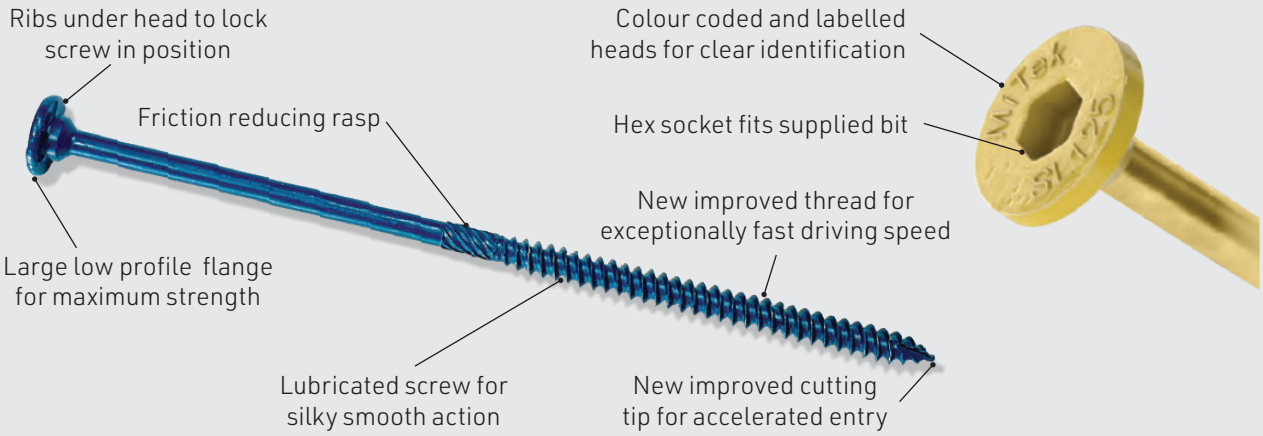

LOAD DATA

Table 01

Uplift Capacity of Wall Plates to Stud Fixings			
Timber Species / Joint Group	**Wall Plate Thickness (mm)**	**Limit State Design Wind Uplift Capacity (kN) per Stud-Lok**	
		SL125	**SL170**
Australian & New Zealand grown pine species / JD4	35	5.98	5.98
	45	5.98	5.98
	70	4.11	5.98
	80	3.37	5.98
	90	2.62	5.98
Australian & New Zealand grown pine species / JD5	35	4.81	4.81
	45	4.81	4.81
	70	3.31	4.81
	80	2.71	4.81
	90	2.11	4.81
Imported White Baltic Pine & European Spruce / JD6	35	3.58	3.58
	45	3.58	3.58
	70	2.46	3.58
	80	w2.02	3.58
	90	1.57	3.58

NOTES

1. The design capacities have been obtained and certified through laboratory testing – refer to MiTek Test Report No. 150405.

2. The uplift design capacities of framing nails in Table 9.19(a) of AS 1684.2 and AS 1684.3 may be added to the Stud-Lok design capacities tabulated in Table 01. The design capacities of glue-coated or deformed shank pneumatically driven nails with minimum 40mm penetration into stud are shown below.

Timber Species / Joint Group	Limit State Uplift Design Capacity (kN) for pneumatically driven nails	
	Number/Nail diameter (mm)	
	2/ø3.05	**2/ø3.33**
JD4	0.26	0.33
JD5	0.17	0.20
JD6	0.12	0.14

3. Design capacities in the tables incorporate the capacity factor (ϕ) for Category 1 structural joints. For other categories, multiply the design capacities by 0.94 for Category 2 and 0.88 for Category 3. Refer to AS 1720.1 for a full definition of each category.

4. Values in Table 01 may be used with LVL or EWP studs and wall plates connection provided the user chooses correct joint group specification in side face, edge and end grain as provided by LVL manufacturer.

5. Splitting of LVLs and EWPs has been observed during application of Stud-Lok especially for LVLs with Joint Group higher than JD4. In case splitting occurs, application of Stud-Lok is not recommended. Reinforce the stud - wall plate connection at split with MiTek PlateTie or StudStrap, if Stud-Lok has already been installed.

Stud-Lok screws can also be used for fixing top plate directly to lintel and bottom plate to joist. Their design capacities are listed in Table 02.

Table 02

Uplift Capacity of Top Plate to Lintel and Bottom Plate to Floor Joist Fixings			
Timber Species / Joint Group	Wall Plate Thickness (mm)	Limit State Design Wind Uplift Capacity (kN) per Stud-Lok	
		SL125	SL170
Australian & New Zealand grown pine species / JD4	35	5.98	5.98
	45	5.98	5.98
	70	5.55	5.98
	80	4.54	5.98
	90	3.53	5.98
Australian & New Zealand grown pine species / JD5	35	4.81	4.81
	45	4.81	4.81
	70	4.45	4.81
	80	3.64	4.81
	90	2.83	4.81
Imported White Baltic Pine & European Spruce / JD6	35	3.58	3.58
	45	3.58	3.58
	70	3.31	3.58
	80	2.71	3.58
	90	2.11	3.58

NOTES

1. Design capacities in the tables incorporate the capacity factor (ϕ) for Category 1 structural joints. For other categories, multiply the design capacities by 0.94 for Category 2 and 0.88 for Category 3. Refer to AS 1720.1 for a full definition of each category.
2. Values in Table 02 may be used with LVL or EWP studs and wall plates connection provided the user chooses correct joint group specification in side face, edge and end grain as provided by LVL manufacturer.
3. Splitting of LVLs and EWPs has been observed during application of Stud-Lok especially for LVLs with Joint Group higher than JD4. In case splitting occurs, application of Stud-Lok is not recommended.
   Reinforce the top plate to lintel and bottom plate to floor joist connections at split with MiTek PlateTie or StudStrap, if Stud-Lok has already been installed.

STUD-LOK FIXING - STANDARD WALLS

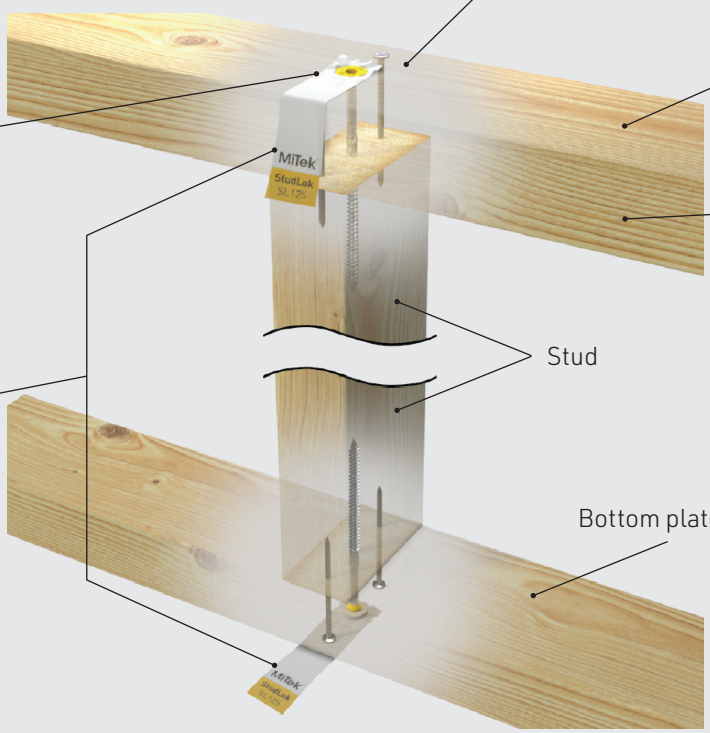

Available for SL125 & SL170

Stud-Lok SL125

Stud-Lok SL170

RAKING WALLS

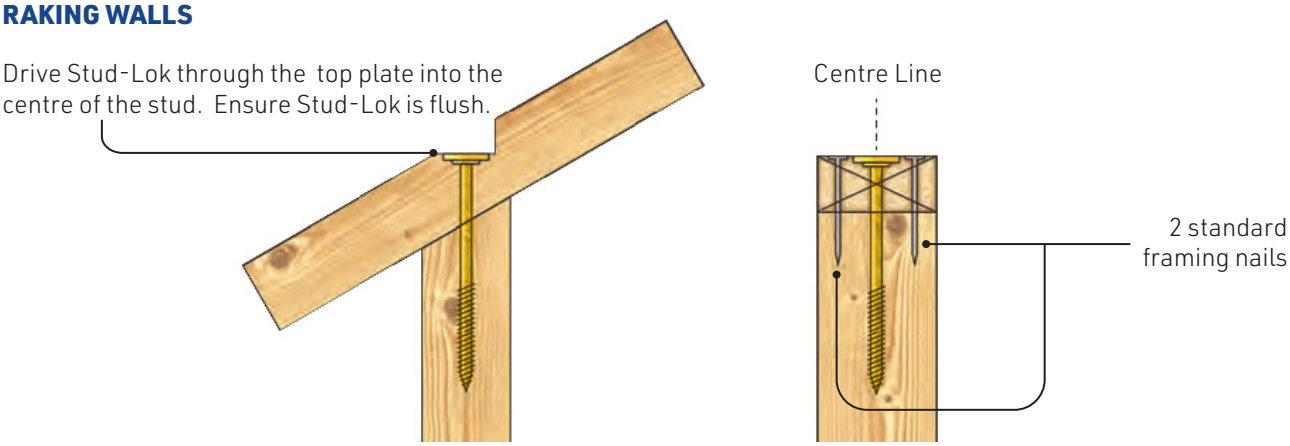

FIXING TOP PLATE TO STUD

Fix ribbon plate to lower top plate in accordance with Clause 2.5 and 9.2.8 in AS 1684.2 and AS 1684.3.

Fix rafter/truss tie-down directly to lower top plate, lintel and/or stud with long and deep connectors such as CycloneTies, when SL170 is not used to fix the ribbon plate to stud.

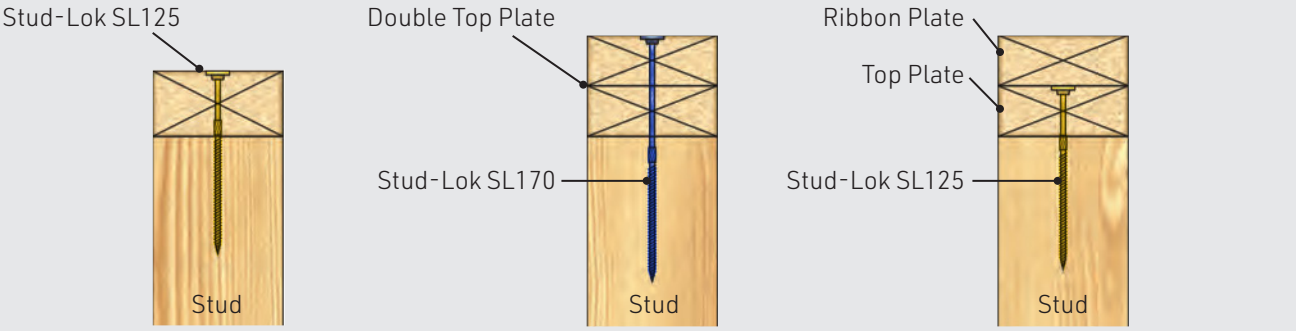

Fix single Top Plate to Stud with Stud-Lok SL125

Fix double Top Plates to Stud with Stud-Lok SL170 (recommended)

Fix lower Top Plate to Stud with Stud-Lok SL125 if Ribbon Plate is not required for Truss Tie-Down fixing (optional)

STUD AT END WALL & MULTIPLE STUD FIXINGS

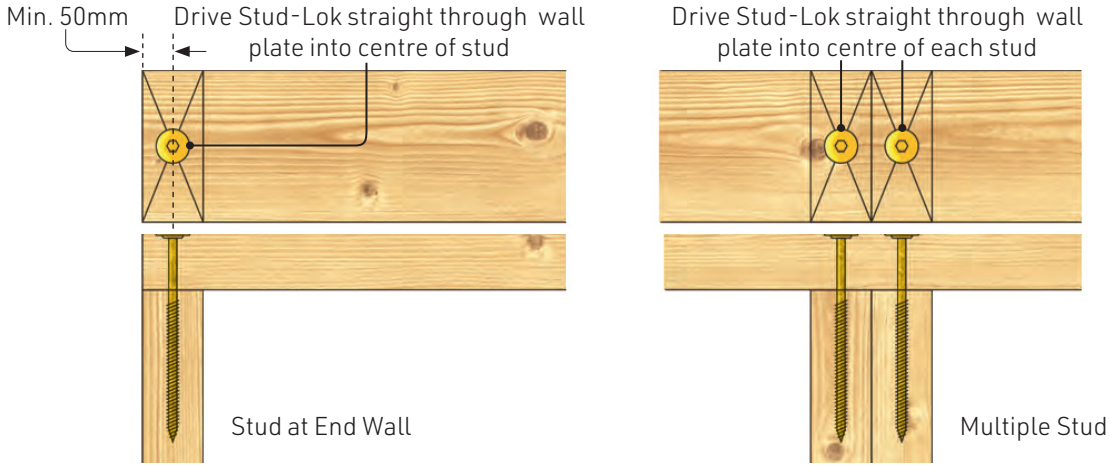

NOTE

Where 50mm end distance to the end of the top plate is not possible - fix in accordance with End Connection A or B.

END CONNECTION A

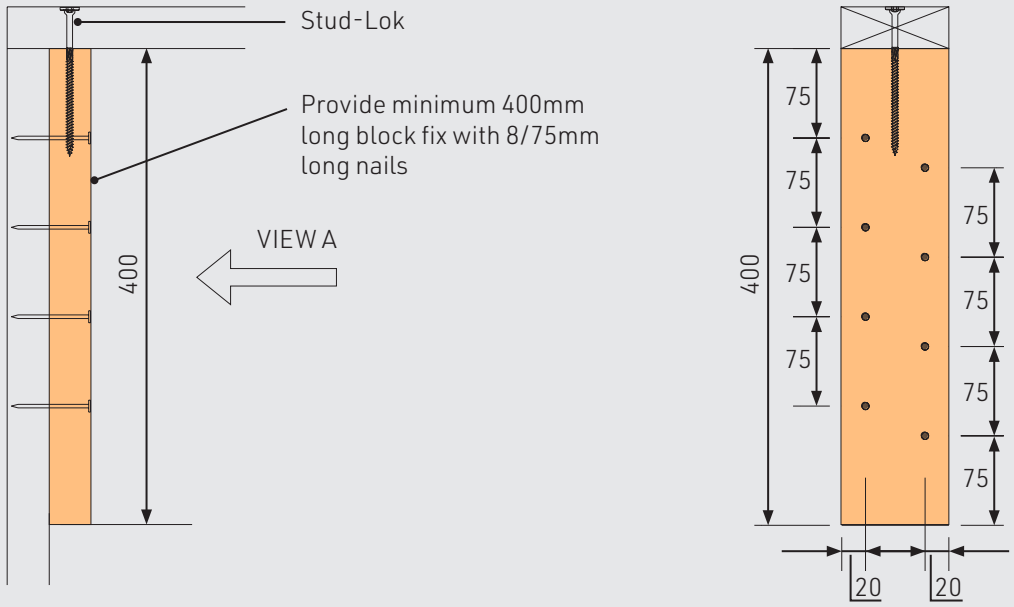

END CONNECTION B

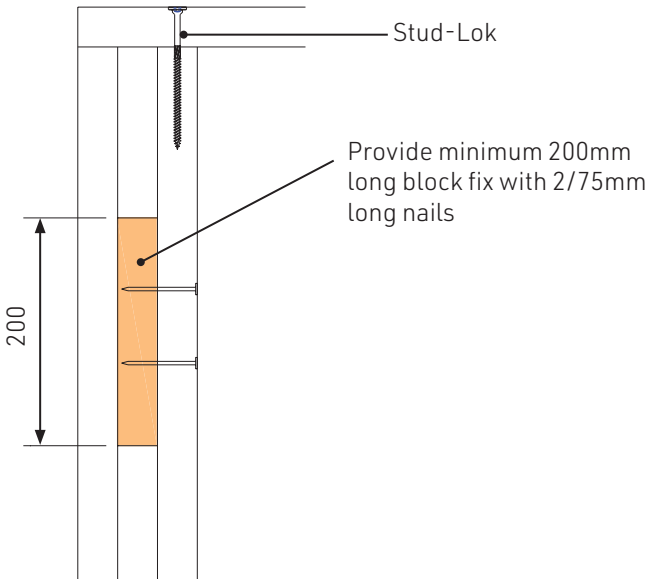

FIXING BOTTOM PLATE TO JOIST

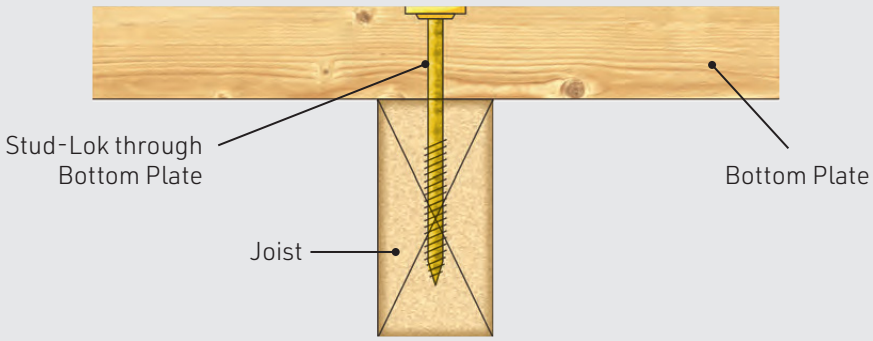

TOP PLATE TO LINTEL CONNECTIONS

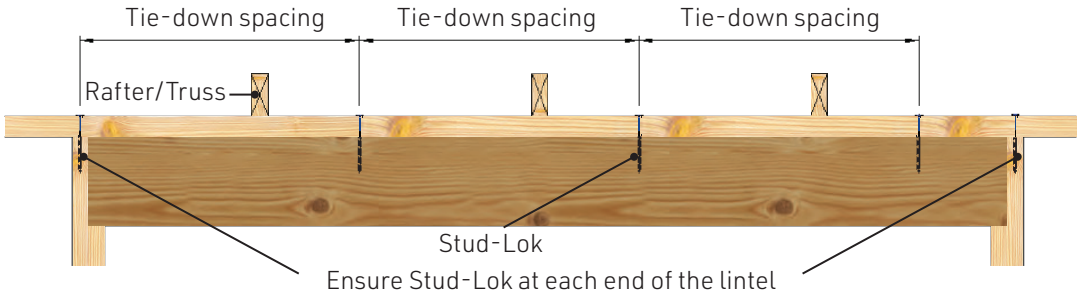

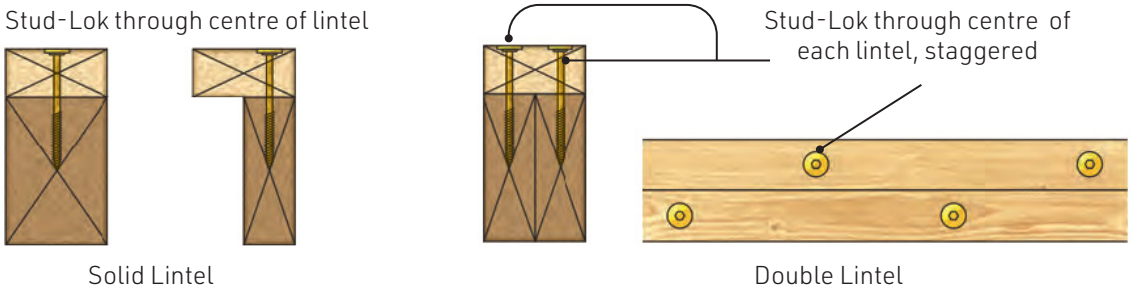

NOTES

1. Fix Stud-Lok through the top plate to lintel at the design tie-down spacing for the required wind uplift capacity listed in Table 02.
2. Tie-down of rafter/truss to top plate by others.
3. All girder trusses are directly tied down to the lintel.
4. The top plate size and grade can be determined from AS 1684 Span Tables for the tie-down spacing nominated in (1) above.

STRUCTURAL WALL BRACING PLATE TO STUD CONNECTIONS

Stud-Lok can be used in lieu of metal straps as required in AS1684.2 & 3, Table 8.18 and AS1684.4 Table 8.3. Refer to MiTek's Wall Plate to Stud Connections Reference Chart for details.

MITEK.COM.AU

NSW +61 2 8525 8000
QLD +61 7 3861 2100
SA +61 8 8234 1326
VIC +61 3 8795 8888
WA +61 8 6279 8925